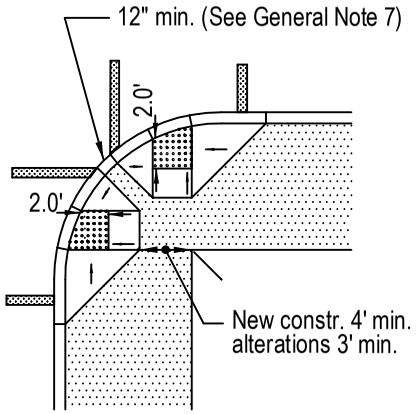

OPTION 4

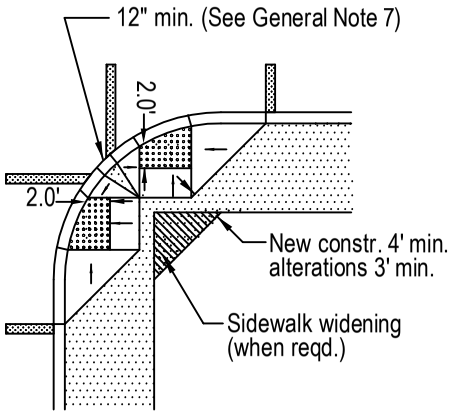

OPTION 5

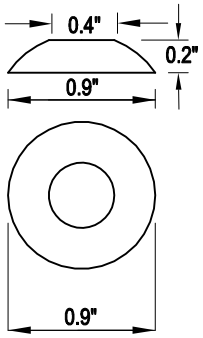

TRUNCATED DOME DETAIL

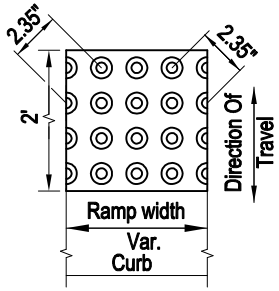

RAMP TEXTURE PATTERN DETAIL

Marked or intended crossing location

General Notes

1. Place truncated dome detectable warning texture in the lower 2' of throat of ramp only. Arrange domes using in-line pattern only as shown in detail right. Color of texture to be safety yellow. For construction of sidewalk ramps outside of public right-of-way, check with State Building Codes for requirements regarding texturing of flares.
2. Sidewalk curb ramp slopes shown are relative to the true level horizon (zero bubble)
3. In alterations curb ramp slope(s) may be 10% for a max. rise of 6" or 12.5% for a max. rise of 3/4". Curb ramps, in alterations, need not exceed 6' in length.
4. Side flares that are not part of the path of travel may be of any slope.
5. Do not slope landing more than 2% in any direction.
6. Ramps for paths intersecting a roadway should be full width of path. When a ramp is used to provide bicycle access from a roadway to a sidewalk, the ramp should be 8' wide, with no texturing.
7. Sidewalk ramp details are based on ORS 447.310 and proposed ADAAG Section 14, June 20, 1994.
8. When 2 curb ramps are immediately adjacent, the curb exposure (e) between the adjacent side flares may range between 3" and full design exposure.
9. For the purpose of this drawing, a curb ramp is considered "perpendicular" if the angle between the longitudianal axis of the ramp and a line tangent to the curb at the ramp center is 75° or greater.

The selection and use of this Standard Drawing, while designed in accordance with generally accepted engineering principles and practices, is the sole responsibility of the user and should not be used without consulting a Registered Professional Engineer.

NOTE: All material and workmanship shall be in accordance with the current Oregon Standard Specifications

OREGON STANDARD DRAWINGS
CITY OF HOOD RIVER
SIDEWALK RAMP PLACEMENT
FOR CURBSIDE SIDEWALKS
SHEET 2
2002

REVISIONS

DATE	DESCRIPTION
12 - 02	City of Hood River Modifications